SYCAMORE

SY5303 Eclipse Wall Light
Instruction Leaflet

Thank you for purchasing this Sycamore Lighting product.

Please make sure instructions are followed carefully prior to and during installation and product is not altered, otherwise warranty may not be valid. For technical support or warranty information please visit www.sycamoreLED.com or call our dedicated technical helpline +44 (0) 113 2866686.

IMPORTANT – Please read prior to installation

1. Please read these instructions carefully before commencing any work
2. Please retain these instructions for future reference
3. This unit must be installed by a qualified electrician in accordance with the IEE wiring regulations and building regulations
4. To prevent electrocution, switch the power off at the mains supply before installing or maintaining this fitting
5. Ensure others cannot restore the electrical supply without your knowledge

1 Turn off the power

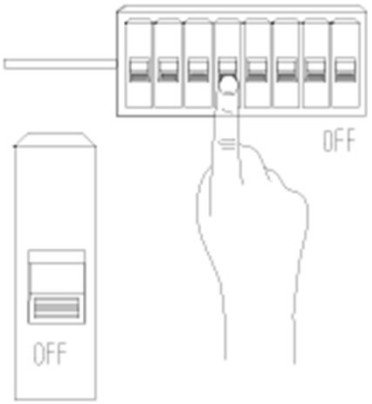

2 Remove the back from the fitting for use as a template to measure the position of the mounting screws

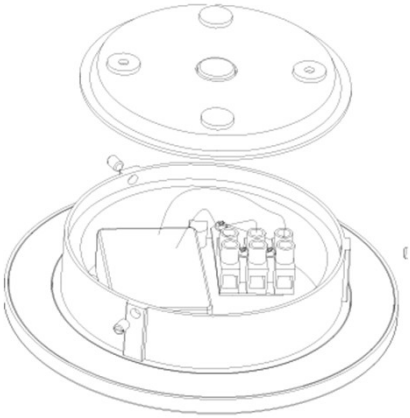

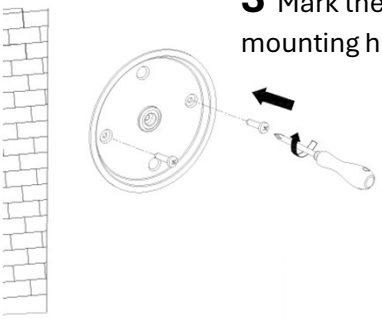

3 Mark the position of the mounting holes

4 Connect the power supply to the terminals inside the fitting. L, N, & E

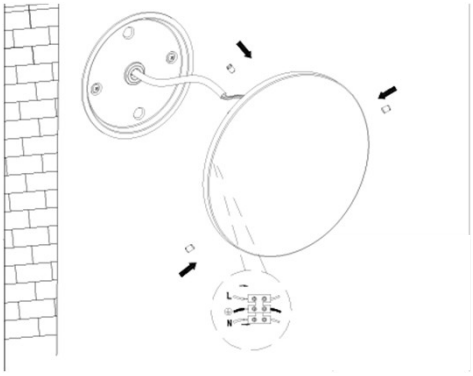

CARE IN USE

1. Please note this fitting has non replaceable parts
2. Always switch off or disconnect from the mains when cleaning the product.
3. We recommend cleaning with a soft dry cloth. Do not use scourers, abrasives or chemical cleaners.
4. Do not allow moisture to come into contact with electrical parts.
5. This luminaire should not be disposed of with normal household waste. When a replacement is purchased, this luminaire should be returned to the retailer to safely dispose of (WEEE Directive effective July 2006—Waste from Electrical & Electronic Equipment)

This product contains a source of energy efficiency class F



Sycamore Lighting Ltd, Unit 5A, Helios 47, 3 Isabella Road, Garforth, Leeds, LS25 2DY Tel: +44 (0)113 286 6686 sales@sycamoreLED.com